# TW SA-55

**Full Rise Scissor Lift**
**Electrical Leveling**

twinbusch.de

## OPERATION AND MAINTENANCE MANUAL

Read this entire manual carefully and completely before installation or operation of the lift.

Twin Busch GmbH | Amperestraße 1 | D-64625 Bensheim
Tel.: +49 (0) 6251-70585-0 | Fax: +49 (0) 6251-70585-29 | info@twinbusch.de

Technical changes for purposes of a technical advancement as well as deviation in colour, errors and printing mistakes are reserved.

# INDEX

**1. Important safety instructions** **4-5**
- 1.1 Important notices
- 1.2 Qualified personnel
- 1.3 Danger notices
- 1.4 Warning signs
- 1.5 Sound level
- 1.6 Training

**2. Overview of the lift** **6**
- 2.1 General descriptions
- 2.2 Technical data
- 2.3 Construction of the lift

**3. Installation instructions** **7-8**
- 3.1 Preparations before installation
- 3.1.1 Tools and equipments needed
- 3.1.2 A list for parts checking
- 3.1.3 Ground conditions
- 3.2 Precautions for installation
- 3.3 Installation
- 3.4 Items to be checked after installation

**4. Operation instructions** **9-12**
- 4.1 Precautions
- 4.2 Descriptions of control box
- 4.3 Flow chart for operation
- 4.4 Operating instructions

**5. Trouble shooting** **13**

**6. Maintenance** **14**

**7. Annex** **15-32**
- Annex 1, Packing list of the whole lift
- Annex 2, Overall diagram
- Annex 3, Floor plan
- Annex 4, Diagram for oil hose connection
- Annex 5, Hydraulic working system
- Annex 6, Wiring diagram
- Annex 7, Diagram for air supply connection
- Annex 8, Separate diagrams for the lift
- Annex 9, Spare parts list
- Annex 10, Size and weight requirements on vehicles

Technical changes for purposes of a technical advancement as well as deviation in colour, errors and printing mistakes are reserved.

# 1. Important safety instructions

## 1.1 Important notices

Twin Busch offers a one year quality warranty for the whole machine, during which any quality problem will be properly solved to the user's satisfaction. However, we will not take any responsibility for whatever bad consequence resulted from improper installation and operation, overload running or unqualified ground condition. This model is specially designed for lifting motor vehicles that weighs within its outmost lifting capacity. Users are not allowed to use it for any other purposes. Otherwise, we as well as our dealers, will not bear any responsibility for accidents or damages of the lift.

Make sure to pay careful attention to the label of the lifting capacity attached on the lift and never try to lift cars with a weight beyond this capacity.

Read this manual carefully before operating the machine so as to avoid economic loss or personnel casualty incurred by wrong operation. Without our professional advice, users are not permitted to make any modification to the control unit or whatever mechanical unit.

## 1.2 Qualified personnel

1.2.1 Only qualified staff, who have been properly trained can operate the lift.

1.2.2 The electrical connection must be done by a qualified electrician.

1.2.3 People who are not concerned are not allowed in the lifting area.

## 1.3 Danger notices

1.3.1 Do not install the lift on any asphalt surface.

1.3.2 Read and understand all safety warnings before operating the lift.

1.3.3 Do not leave the controls while the lift is still in motion.

1.3.4 Keep hands and feet away from any moving parts. Keep feet clear of the lift when lowering.

1.3.5 Only properly trained personnel can operate the lift.

1.3.6 Do not wear unfit clothes such as large clothes with flounces, tires, etc, which could be caught by moving parts of the lift.

1.3.7 To prevent evitable incidents, surrounding areas of the lift must be tidy and with nothing unconcerned.

1.3.8 The lift is simply designed to lift the entire body of vehicles, with its maximum weight within the lifting capacity.

1.3.9 Always insure the safety locks are engaged before any attempt to work near or under the vehicle. Never remove safety related components from the lift. Do not use if safety related components are damaged or missing.

1.3.10 Do not rock the vehicle while on the lift or remove any heavy component from vehicle that may cause excessive weight shift.

1.3.11 Check at any time the parts of the lift to ensure the agility of moving parts and the performance of synchronization. Ensure regular maintenance and if anything abnormal occurs, stop using the lift immediately and contact our dealers for help.

1.3.12 Lower the lift to its lowest position and do remember to cut off the power source when service finishes.

1.3.13 Do not modify any parts of the lift without manufacturer’s advice.

1.3.14 The lift is only to be operated in a dry indoor area.

1.3.15 If the lift is going to be left unused for a long time, users are required to:

a. Disconnect the power source;

b. Empty the oil tank;

c. Lubricate the moving parts with hydraulic oil.

**Attention: For environment protection, please dispose the disused oil in a proper way.**

Technical changes for purposes of a technical advancement as well as deviation in colour, errors and printing mistakes are reserved.

## 1.4 Warning signs

All safety warning labels are clearly depicted on the lift to ensure that the operator is aware of and avoids the dangers of using the lift in an incorrect manner. The labels must be kept clean and they have to be replaced if detached or damaged. Please read carefully the meaning of each label and memorize them for future operation

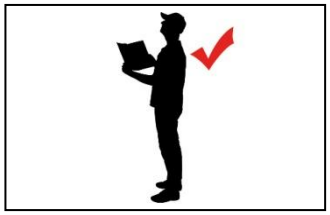

Read the manual before use

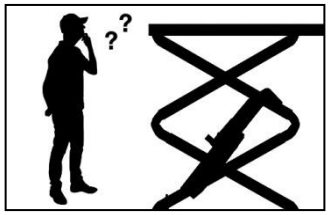

Only trained personnel should use the lift

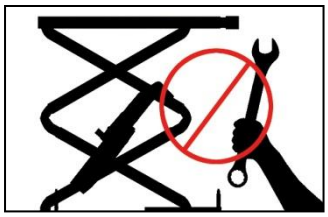

Repairs and service only through authorized personel, never tamper with the safety devices

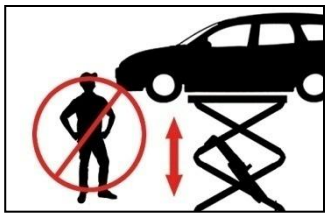

No unauthorized persons under the lift when in use

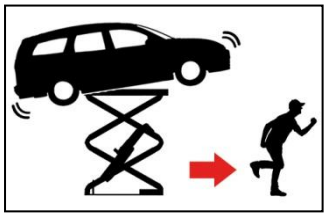

Always leave escape routs clear

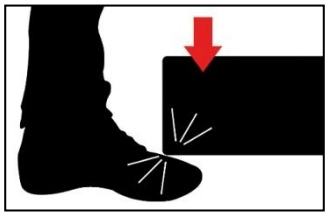

Please take care not to trap your feet

Danger of crushing when letting down

Never use only one side oft he lift

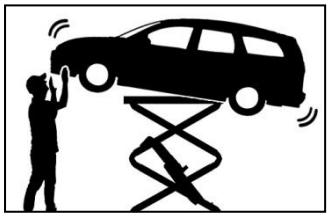

Avoid shaking

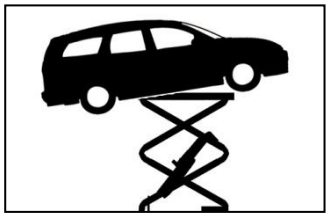

Vehicles should be evenly balanced

No obstcles under the lift

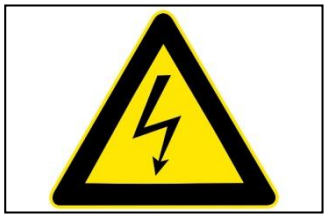

High voltage

## 1.5 Sound Level

The sound emitted from the lift should not exceed 75DB. For the sake of your health, we suggest putting a noise detector in your working area.

## 1.6 Training

Only qualified people, who have been properly trained, can operate the lift. We are quite willing to provide professional training for the users when necessary.

Technical changes for purposes of a technical advancement as well as deviation in colour, errors and printing mistakes are reserved.

# 2. Overview of the lift

## 2.1 General descriptions

This model is in-ground mounted (optional -surface mounted) and is mainly composed by two lifting platforms, two base plates, two oil cylinders and a set of power unit. The gear pump works when power supply is connected and meanwhile oil in the pump will push upwards the pistons of oil cylinders. Thus, scissor brackets of the lift rise accordingly. In the process of rising, the mechanical lock will automatically engaged so as to avoid sudden drop down caused by failure of hydraulic system.
Besides, designs like, 24V working voltage of control box and limit switch, low-height alarming buzzer, anti-surge valves, etc have fully considered your personal security.

## Safety structure:

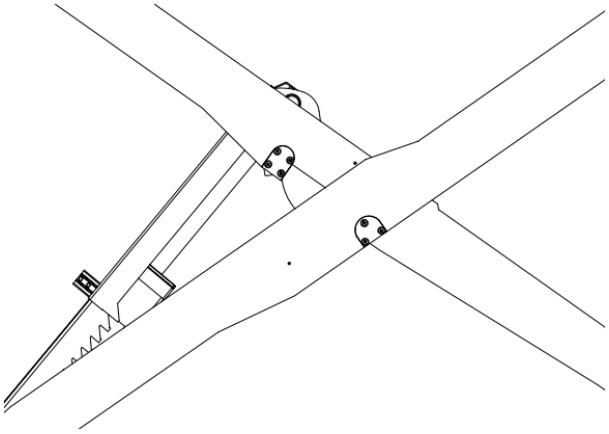

## 2.2 Technical data

| Model | Lifting capacity | Lifting time | Lifting height | Electrical requirement |
|---|---|---|---|---|
| TW SA-55 | 5500 kg | 80 Sec | 1750 mm | 380V/415V, Three Phrase |

## 2.3 Construction of the lift

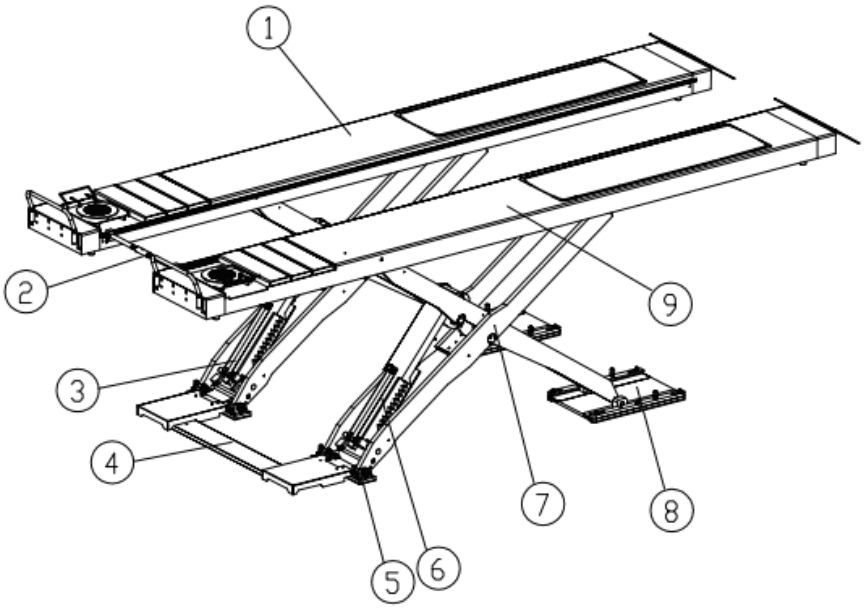


1. Platform A
2. Connection rod
3. Oil cylinder assembly
4. Hose & cable protector
5. Base A
6. Driving oil cylinder assembly
7. Scissor bracket
8. Base B
9. Platform B

Technical changes for purposes of a technical advancement as well as deviation in colour, errors and printing mistakes are reserved.

# 3. Installation instructions

## 3.1 Preparations before installation

### 3.1.1 Tools and equipments needed

√ Electrical drill

√ Open wrenches

√ Screw drivers

√ Adjustable spanner

### 3.1.2 List for parts checking - Annex 1 (Packing list)

Unfold the package and check if any parts missed as per Annex 1. Do not hesitate to contact us in case any parts missed, but if you do not contact us and insist installing upon the lack of some parts, we as well as our dealers will not bear any responsibility for this and will charge for any parts subsequently demanded by the buyer.

### 3.1.3 Ground conditions

The lift should be fixed on a smooth and solid concrete ground with its strength more than 3000psi, tolerance of flatness less than 5mm and minimum thickness of 200mm. In addition, newly built concrete ground must undergo more than 28 days' cure and reinforcement.

## 3.2 Precautions for installation

3.2.2 Joints of oil hose and wiring must be firmly connected in order to avoid leakage of oil hose and looseness of electrical wires.

3.2.3 All bolts should be firmly screwed up.

3.2.4 Do not place any vehicle on the lift in the case of trial running.

Technical changes for purposes of a technical advancement as well as deviation in colour, errors and printing mistakes are reserved.

## 3.3 Installation

**Step1:** Use a fork lift to place the machine at installation site as required. See **Annex 3** for space requirements on the installation site.

**Step 2:** Connect the oil hose as per the diagram for oil hose connection. (This step is very important and it is quite necessary to understand the diagram of oil hose connection in Annex 4 before operation)

**Step 3:** Connect the pneumatic release system by referring to the diagram of air hose connection in Annex 7.

**Step 4:** Connect the power supply and quick plugs of the limit switch.

**Step 5:** Pour 16 liters of anti-abrasion hydraulic oil into the oil tank. The level of oil shall be 10mm to 40mm distance from the top of the tank. (You may measure by the feeler attached on the cover of the tank)

**Step 6:** Leveling

## Electrical leveling

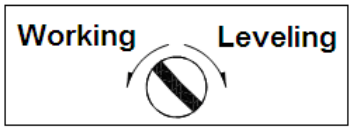


1 Connect the power supply and switch on the power button on the control panel until the green indicator light shines.

2 Shift the option switch in the control unit to “Working” and press the “UP" button for 30 seconds. Normally at least one of the platforms will rise at this movement. **(In the case the motor works but the platform does not move upwards after the “UP” button has been pressed for 30 seconds, the operators needs to change the phase order of the motor’s wiring)**

3 Turn the option switch to “Leveling” and press “UP” or “DOWN” button to adjust the height of one of the Platforms until it reach the same height as that of the other platform.

If synchronization is still not achieved, repeat the above leveling steps until synchronization reached.

## 3.4 Items to be checked after installation

| S/N | Check items | YES | NO |
|---|---|---|---|
| 1 | Are two platforms adjusted with the same level? | | |
| 2 | Are oil hose tightly connected? | | |
| 3 | Are all electric connections correct? | | |
| 4 | Are valves of the pump unit oil tight? | | |

Technical changes for purposes of a technical advancement as well as deviation in colour, errors and printing mistakes are reserved.

# 4. Operation instructions

## 4.1 Precautions

4.1.1 Check all the joints of oil hose. Only when there is no leakage, the lift can start work.

4.1.2 The lift, if its safety device malfunctions, shall not be used.

4.1.3 The machine shall not lift or lower an automobile if its center of gravity is not positioned midway of the rising platforms. Otherwise, we as well as our dealers will not bear any responsibility for any consequence resulted thereby.

4.1.4 Operators and other personnel concerned should stand in a safety area during lifting and lowering process.

4.1.5 When platforms being raised to the desired height, switch off the power at once to prevent any wrong operation done by unconcerned people.

4.1.6. Make sure the safety lock of the lift is engaged before start working under the vehicle and no people under the vehicle during lifting and lowering process.

## 4.2 Descriptions of the control panel

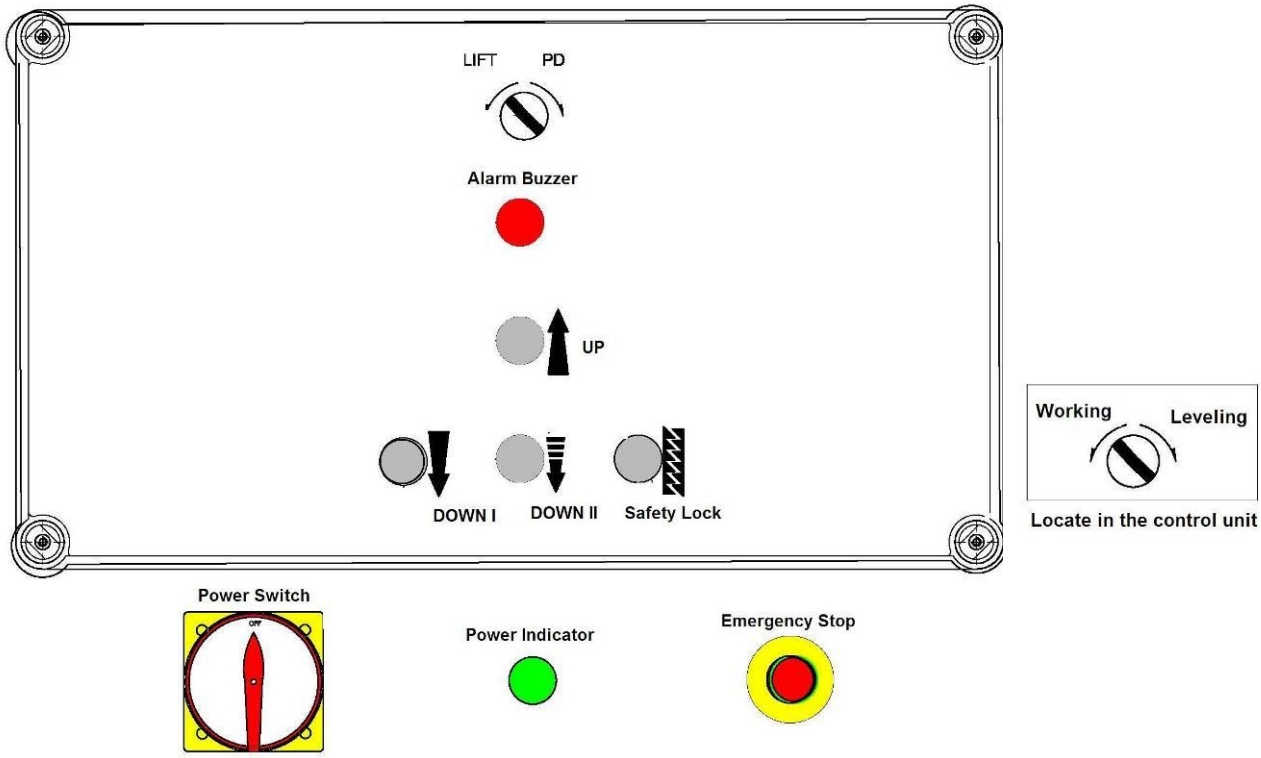

## 4.3 Flow chart for operation

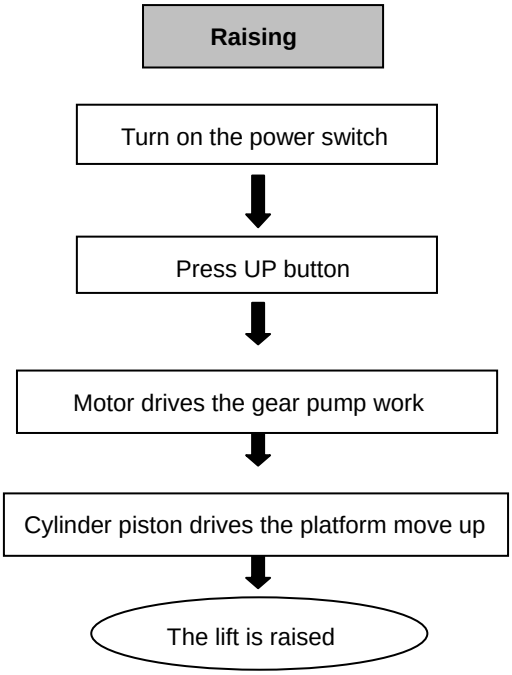


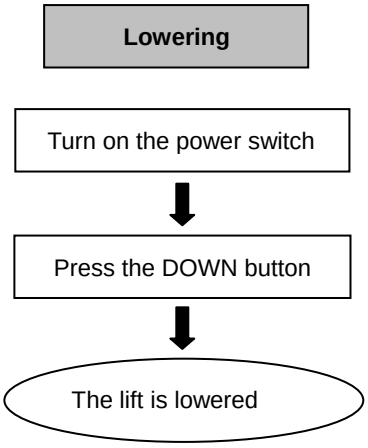


Technical changes for purposes of a technical advancement as well as deviation in colour, errors and printing mistakes are reserved.

## 4.4 Operation instructions

### 4.4.1 Operation instructions for the lift

#### Raise the lift

1. Make sure that you have read and understood the operation manual before operation.
2. Drive and park the vehicle midway between two platforms.
3. Place the four rubber pads under the prop-points of the vehicle and ensure car's gravity have fallen on the rubber pads.
4. Press the UP button on the control box until rubber pads have touched the prop-points of vehicle.
5. Keep on pressing the UP button to lift the vehicle a bit higher from the ground and check again if the vehicle is in a safe position.
6. Having raised the vehicle to the required height, operators must press down the safety lock button to ensure the mechanical safety lock is engaged. Press the "Emergency Stop" and check again the stability before performing maintenance or repair work,

#### Lower the lift

1. Switch on.
2. Press the DOWN I button to lower the lift. It will stop lowering when clearance between the platforms and the ground reached to 800 mm.
3. Press DOWN II button to continue lowering the platforms. Alarming buzz will be heard unless you stop pressing DOWN II.
4. Drive the vehicle away

### 4.4.2 Operation instructions for the optional PD system

Running directions

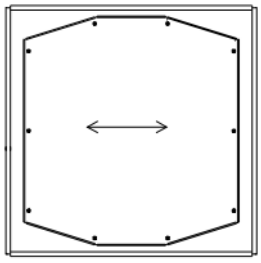

Left

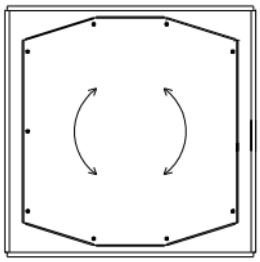

Right

1. Turn the option switch on the control panel to "PD"

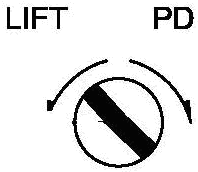


2. If the following smart remote control is chosen, you can press the button on it to run the PD system.

Technical changes for purposes of a technical advancement as well as deviation in colour, errors and printing mistakes are reserved.

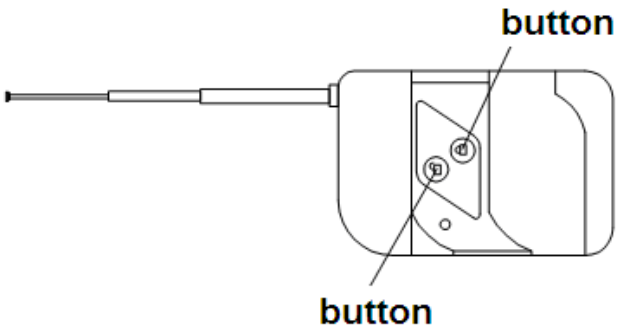


3. If the following rechargeable LED torch style remote control is chosen, you can press the green and red button on it to run the PD system. When there is need, you may turn on the LED lamp for under vehicle checking work. Place it back to its holder to have it charged in case you do not use it.

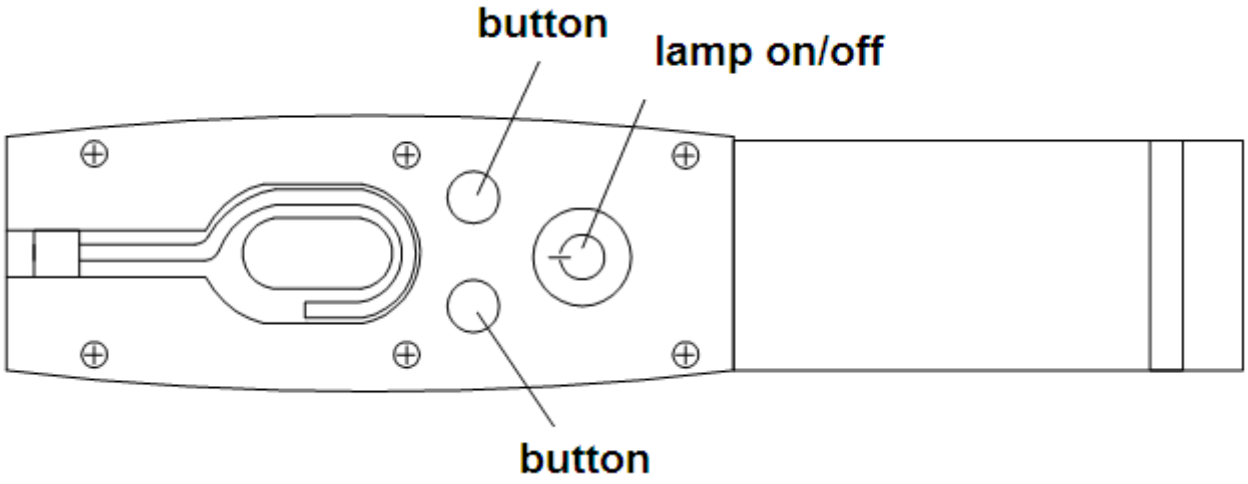


Technical changes for purposes of a technical advancement as well as deviation in colour, errors and printing mistakes are reserved.

# 5. Trouble Shooting

**ATTENTION:** If the trouble could not be fixed by yourself, please do not hesitate to contact us for help. We will offer our service at the earliest time we can. By the way, your troubles will be judged and solved much faster if you could provide us more details or pictures of the trouble.

| TROUBLES | CAUSE | SOLUTION |
|---|---|---|
| Motor does not run and will not raise | The wire connection is loose. | Check and make a good connection. |
| | The motor is burnt | Replace it. |
| | The limit switch is damaged or the wire | Connect it or adjust or replace the limit |
| Motor runs but will not raise | The motor run reversely. | Check the wire connection. |
| | Overflow valve is loose or jammed. | Clean or adjust it. |
| | The gear pump is damaged. | Replace it. |
| | Oil level is too low. | Add oil. |
| | The oil hose became loose or dropped off. | Tighten it. |
| | The cushion valve became loose or jammed. | Clean or adjusts it. |
| Platforms go down slowly after being raised | The oil hose leaks. | Check or replace it. |
| | The oil cylinder is not tightened. | Replace the seal. |
| | The single valve leaks. | Clean or replace it. |
| | The overflow valve leaks. | Clean or replace it. |
| | Electrical unloading valve leaks. | Clean or replace it. |
| Raising too slow | The oil filter is jammed. | Clean or replace it. |
| | Oil level is too low. | Add oil. |
| | The overflow valve is not adjusted to the right | Adjust it. |
| | The hydraulic oil is too hot (above 45°). | Change the oil. |
| | The seal of the cylinder is abraded. | Replace the seal. |
| Lowering too slow | The throttle valve jammed. | Clean or replace. |
| | The hydraulic oil is dirty. | Change the oil. |
| | The anti-surge valve jammed. | Clean it. |
| | The oil hose jammed. | Replace it. |

Technical changes for purposes of a technical advancement as well as deviation in colour, errors and printing mistakes are reserved.

# 6. Maintenance

Easy and low cost routine maintenance can ensure the lift work normally and safely. Following are requirements for routine maintenance. You may choose the frequency of routine maintenance by consulting your lift's working conditions and time.

## 6.1. Daily Check

The user must perform daily check. Daily check of safety system is very important – the discovery of device failure before action could save your time and prevent you from great loss, injury or casualty.

· Check whether oil hose well connected. No leakage is allowed.
· Check the electric connections .Make sure all connections are in good condition.
· Check whether the expansion bolts well anchored.
· Check if safety teeth and safety block matched well or not.

### 6.2. Weekly Check

· Check the flexibility of moving parts.
· Check the working conditions of safety parts.
· Check the amount of oil left in the oil tank. Oil is enough if the carriage can be raised to highest position. Otherwise, oil is insufficient.
· Check whether the expansion bolts well anchored.

### 6.3. Monthly Check

· Check whether the expansion bolts well anchored.
· Check the tightness of the hydraulic system and screw firm the joints if it leaks.
· Check the lubrication and abrasion circumstance of moving parts.

### 6.4. Yearly Check

· Empty the oil tank and check the quality of hydraulic oil.
· Wash and clean the oil filter.

**The lift will keep in a good working condition and damages could be reduced. If you have strictly followed the above maintenance requirements.**

Technical changes for purposes of a technical advancement as well as deviation in colour, errors and printing mistakes are reserved.

# 7. ANNEX

## Annex 1, Packing List of the whole lift

| S/N | Name | Desc. | Qty |
|---|---|---|---|
| 1 | vehicle lift (half) | Assembly | 2 |
| 2 | Expansion bolt M16*120 | Standard | 12 |
| 3 | Control unit | Assembly | 1 |

## Annex2, Overall diagram

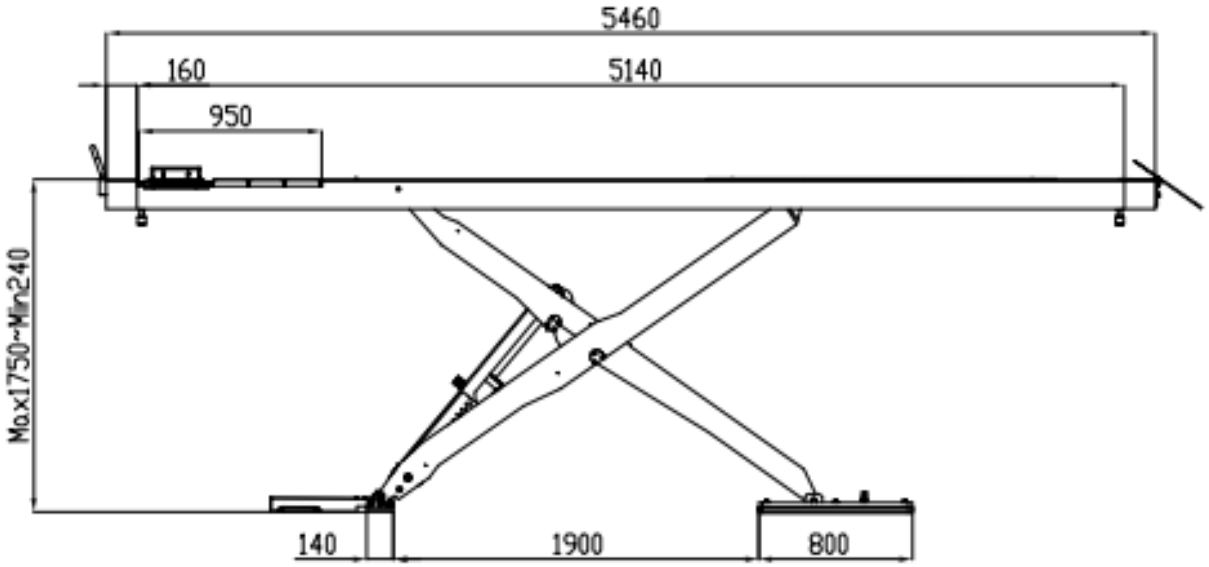


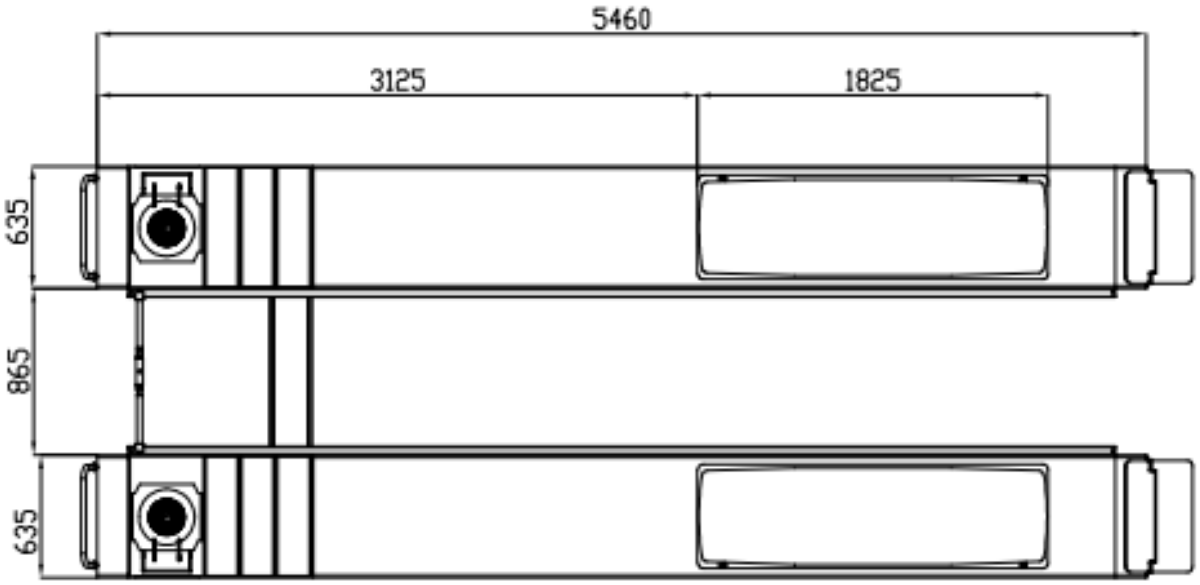


Technical changes for purposes of a technical advancement as well as deviation in colour, errors and printing mistakes are reserved.

## Annex3, Floor plan

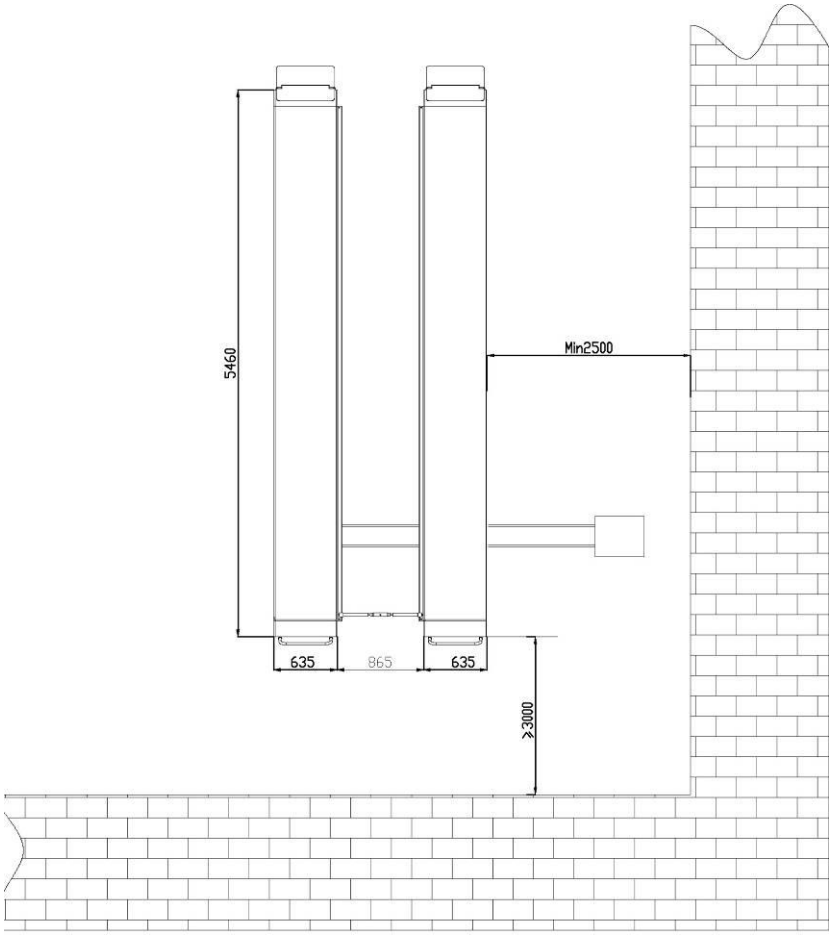


Technical changes for purposes of a technical advancement as well as deviation in colour, errors and printing mistakes are reserved.

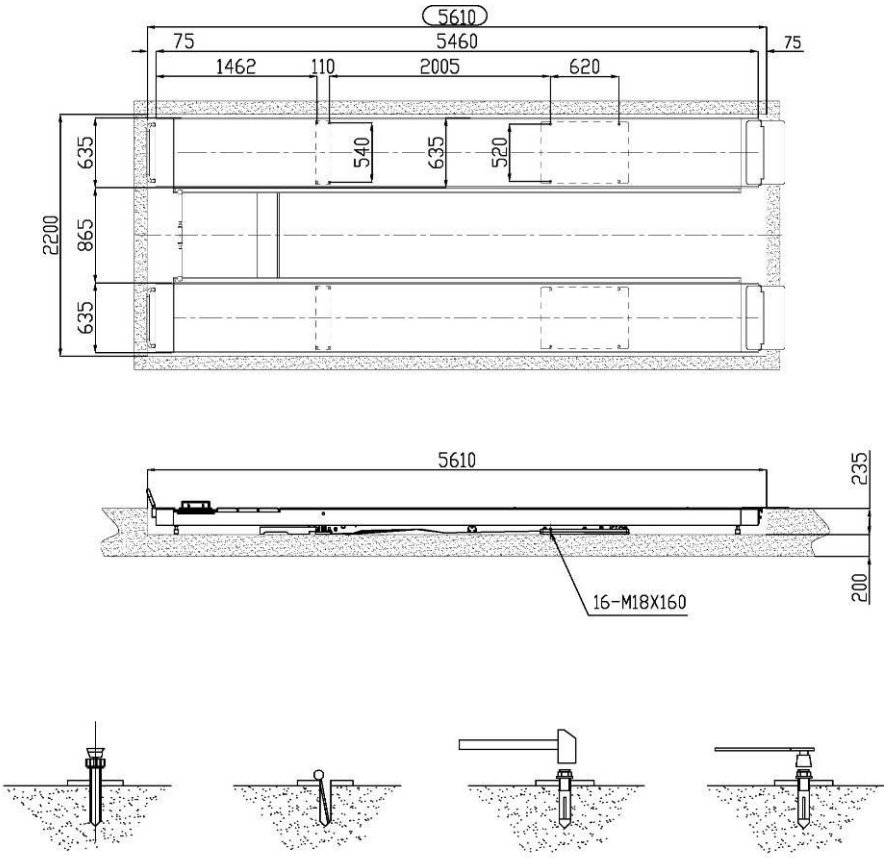


## Annex 4, Diagram for oil hose connection

## Separate diagram for oil hose connection

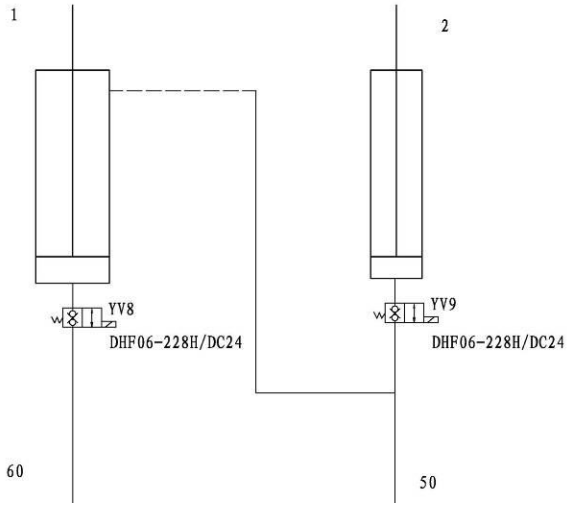


Technical changes for purposes of a technical advancement as well as deviation in colour, errors and printing mistakes are reserved.

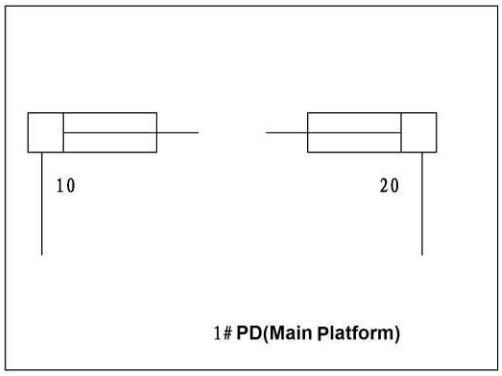


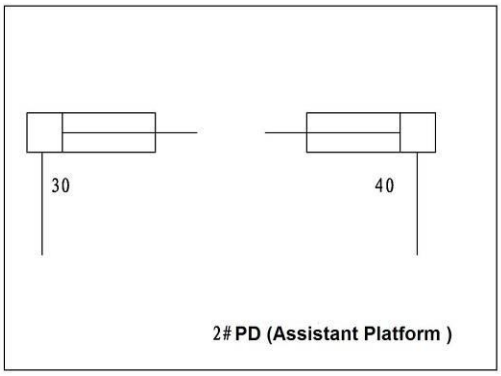


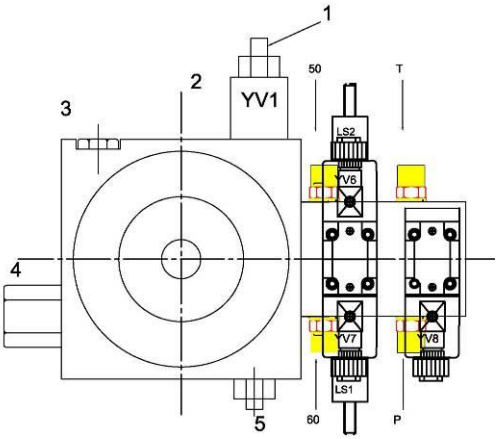


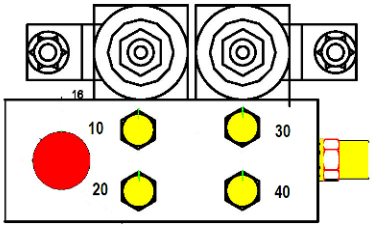


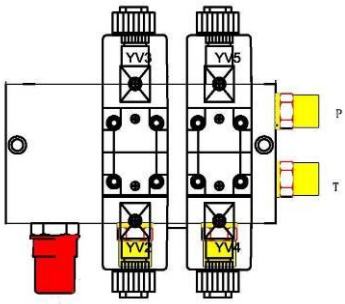


Technical changes for purposes of a technical advancement as well as deviation in colour, errors and printing mistakes are reserved.

## Annex 5, Hydraulic working system

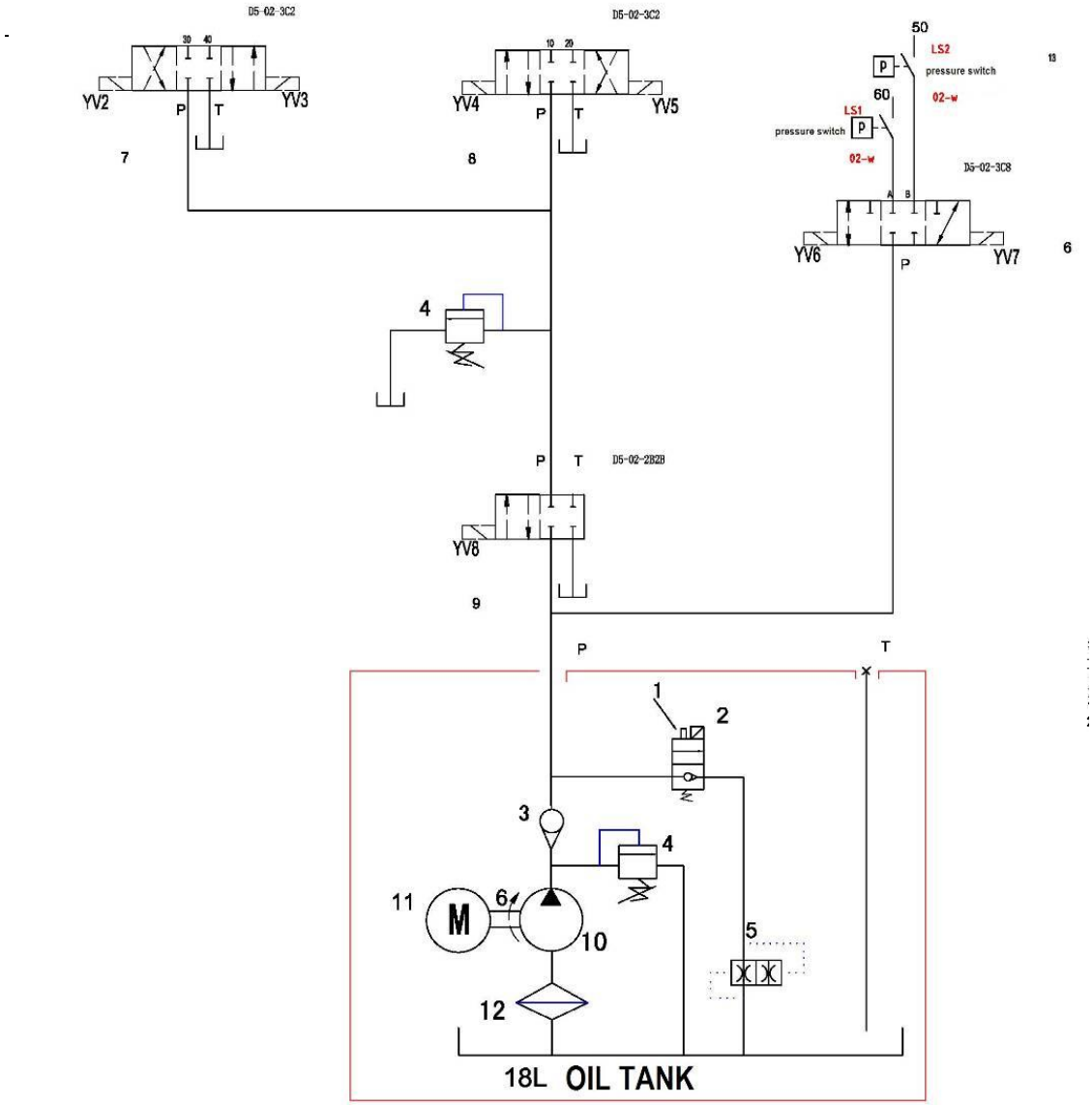


1. Emergent unloading valve
2. Electrical unloading valve
3. Single-way valve
4. Overflow valve
5. Lowering throttle valve
6. Solenoid valve of the lift
7. Solenoid valve of PD
8. Solenoid valve of PD
9. solenoid valve
10. Pump
11. Motor
12. Oil filter

12. Pressure relay

Technical changes for purposes of a technical advancement as well as deviation in colour, errors and printing mistakes are reserved.

## Annex6, Wiring diagram

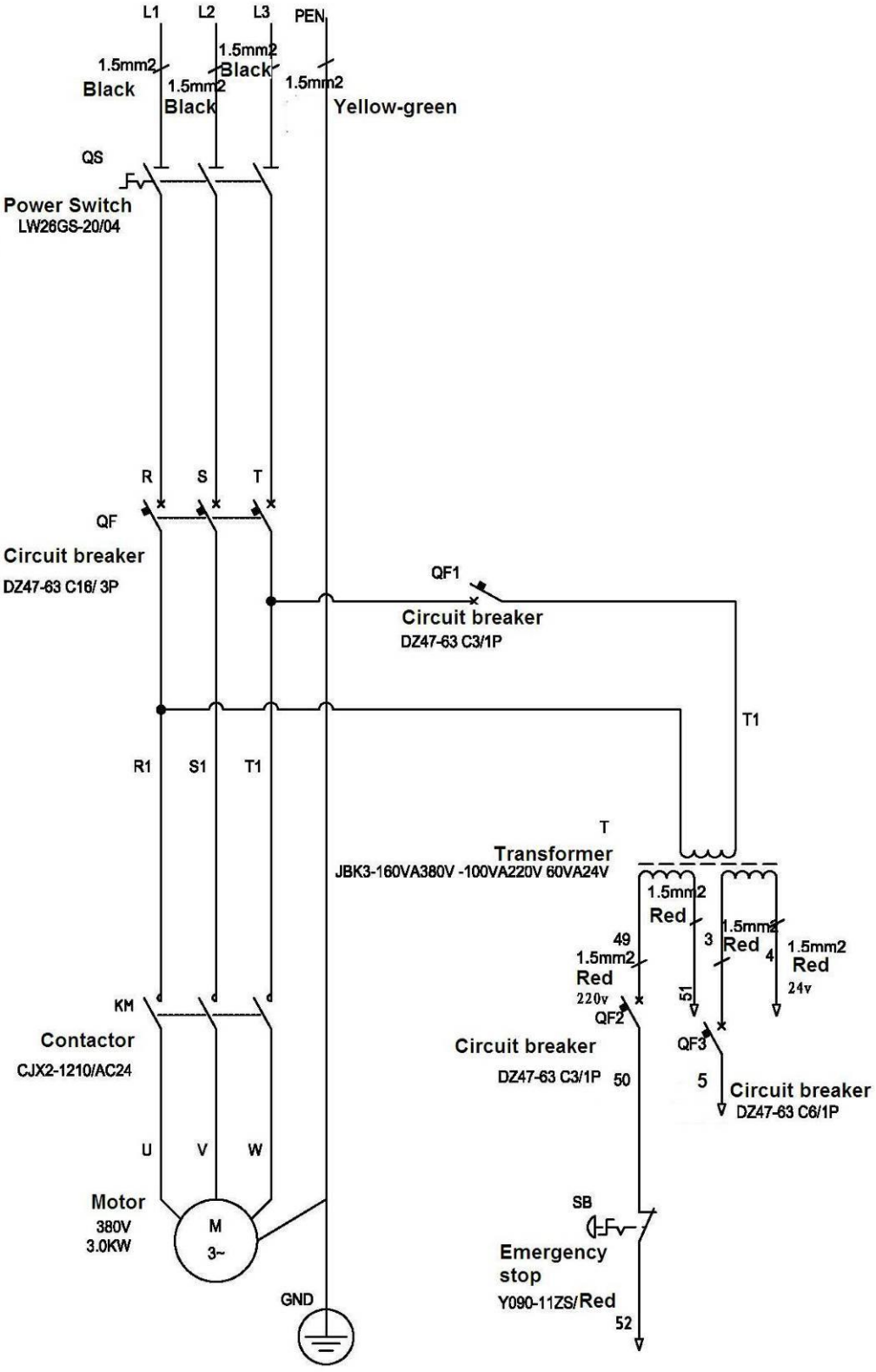


Technical changes for purposes of a technical advancement as well as deviation in colour, errors and printing mistakes are reserved.

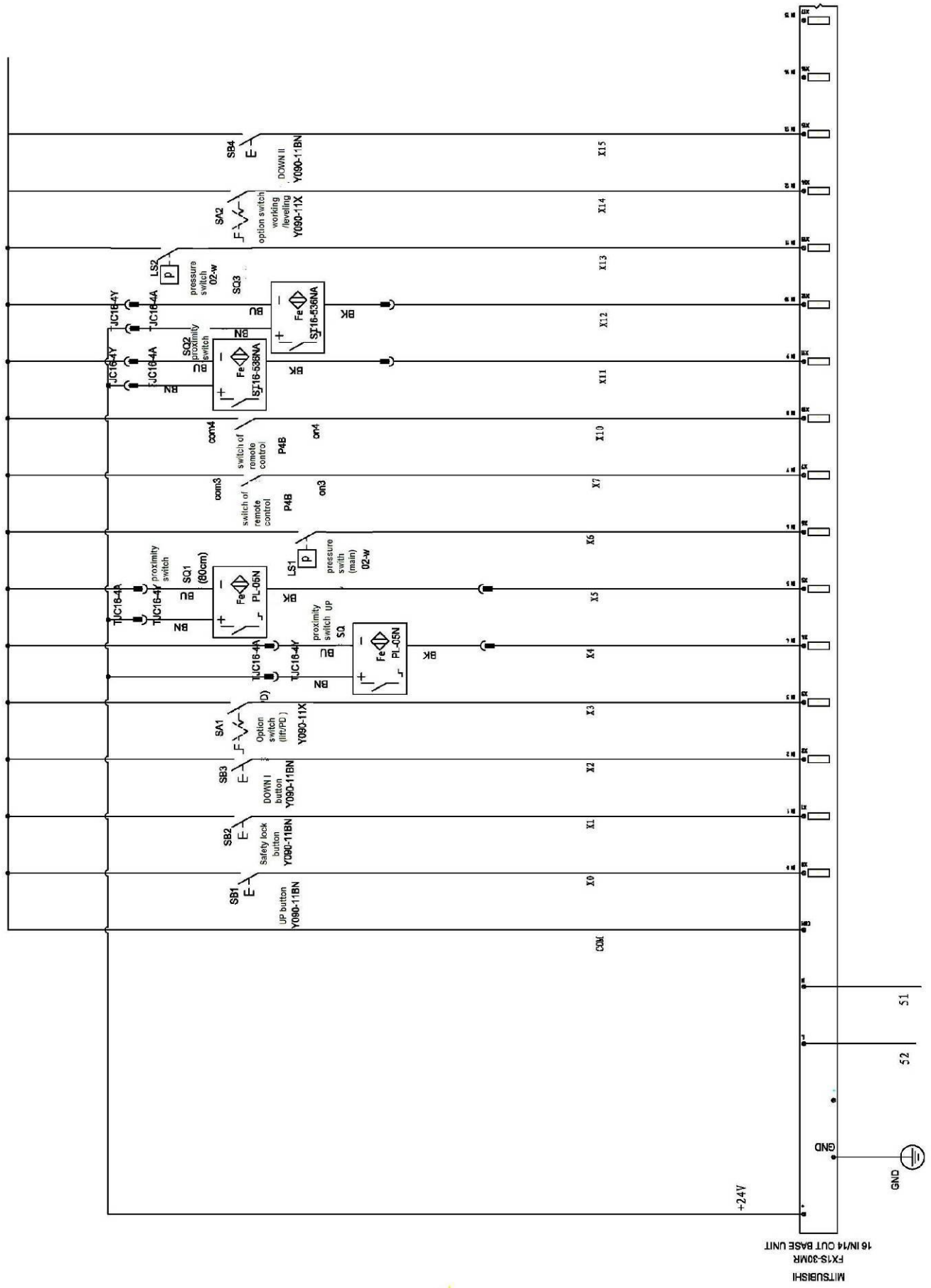


Technical changes for purposes of a technical advancement as well as deviation in colour, errors and printing mistakes are reserved.

Technical changes for purposes of a technical advancement as well as deviation in colour, errors and printing mistakes are reserved.

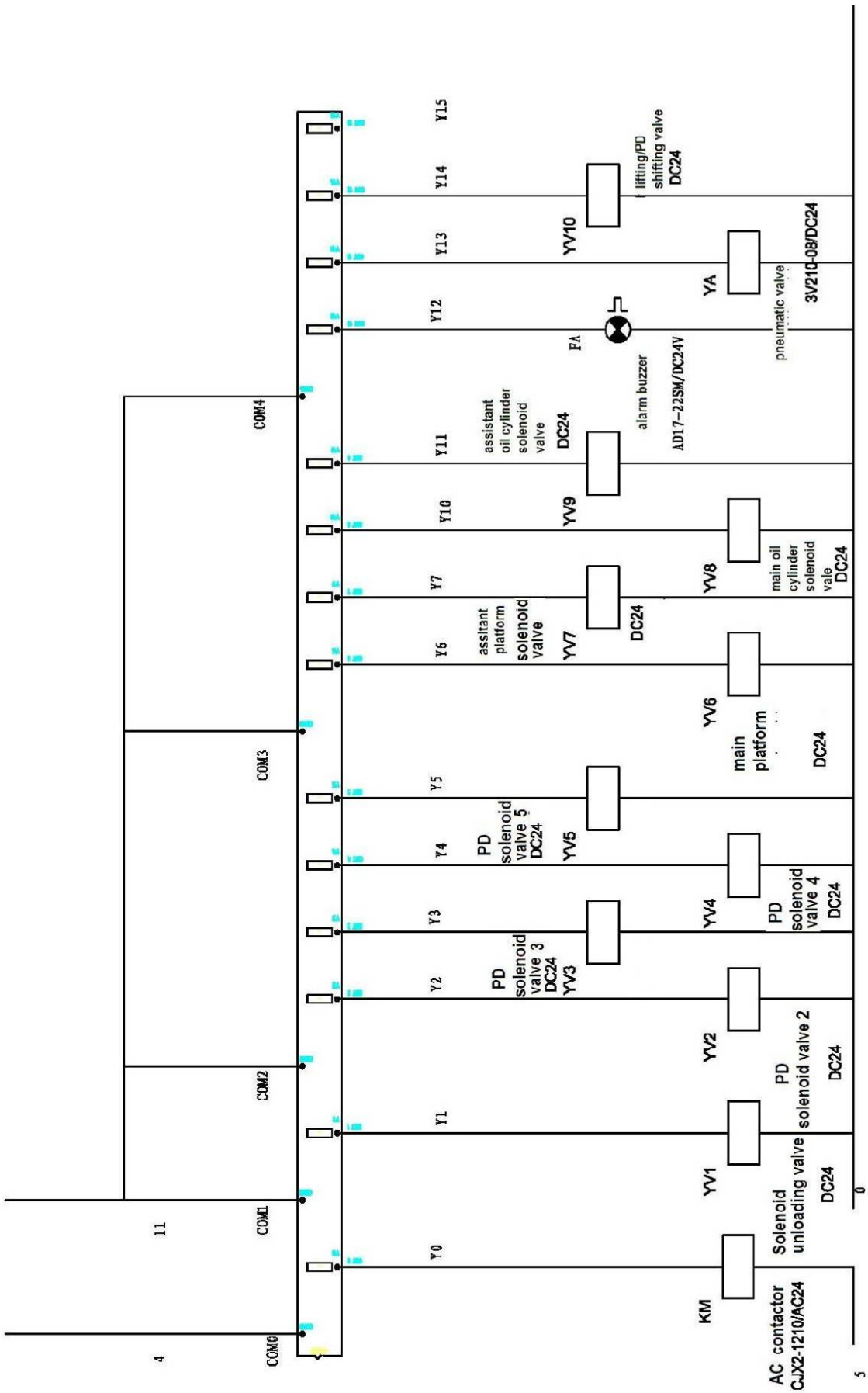
COM0
COM1
COM2
COM3
COM4
Y0
Y1
Y2
Y3
Y4
Y5
Y6
Y7
Y10
Y11
Y12
Y13
Y14
Y15
KM
AC contactor
CJX2-1210/AC24
Solenoid
unloading valve
DC24
YV1
PD
solenoid valve 2
DC24
YV2
PD
solenoid
valve 3
DC24
YV3
PD
solenoid valve 4
DC24
YV4
PD
solenoid
valve 5
DC24
YV5
main
platform
DC24
YV6
assitant
platform
solenoid
valve
YV7
DC24
main oil
cylinder
solenoid
vale
DC24
YV8
assistant
oil cylinder
solenoid
valve
DC24
YV9
alarm buzzer
AD17-22SM/DC24V
FA
lifting/PD
shifting valve
DC24
YV10
pneumatic valve
3V210-08/DC24
YA

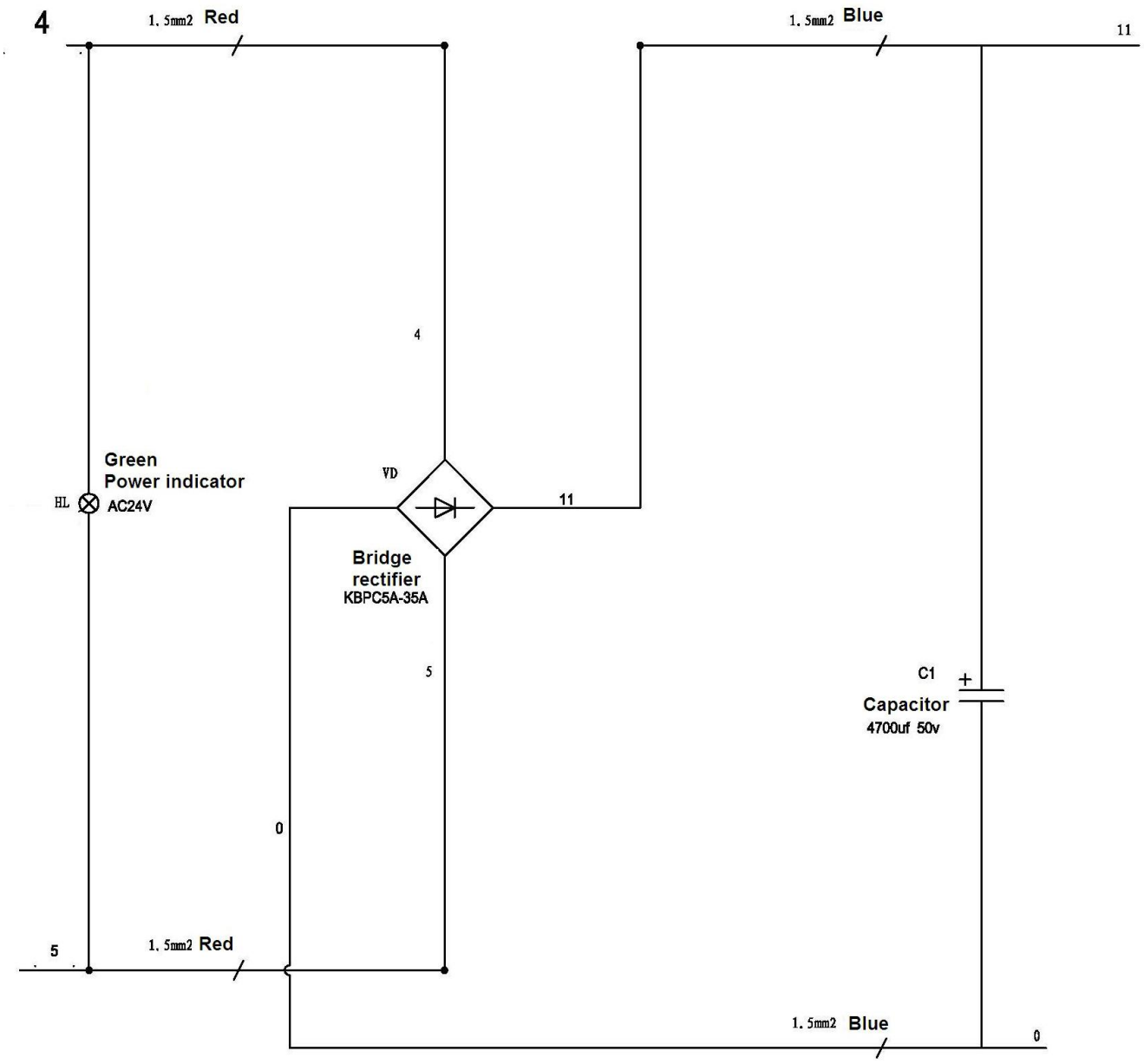


Technical changes for purposes of a technical advancement as well as deviation in colour, errors and printing mistakes are reserved.

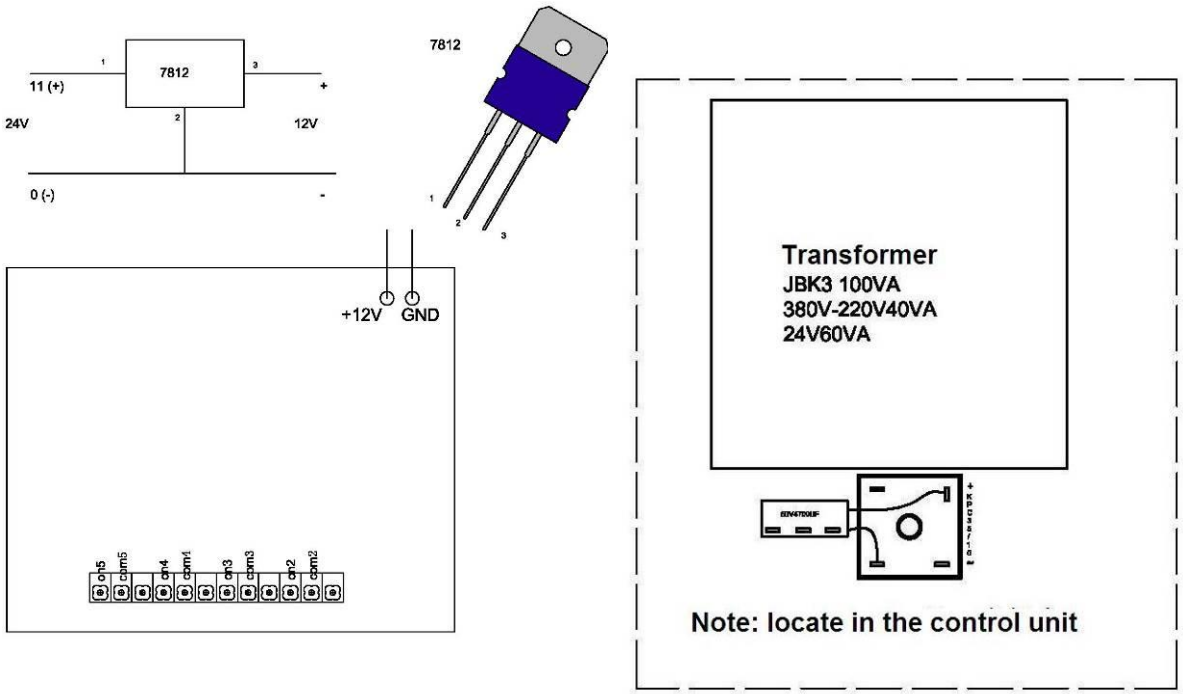


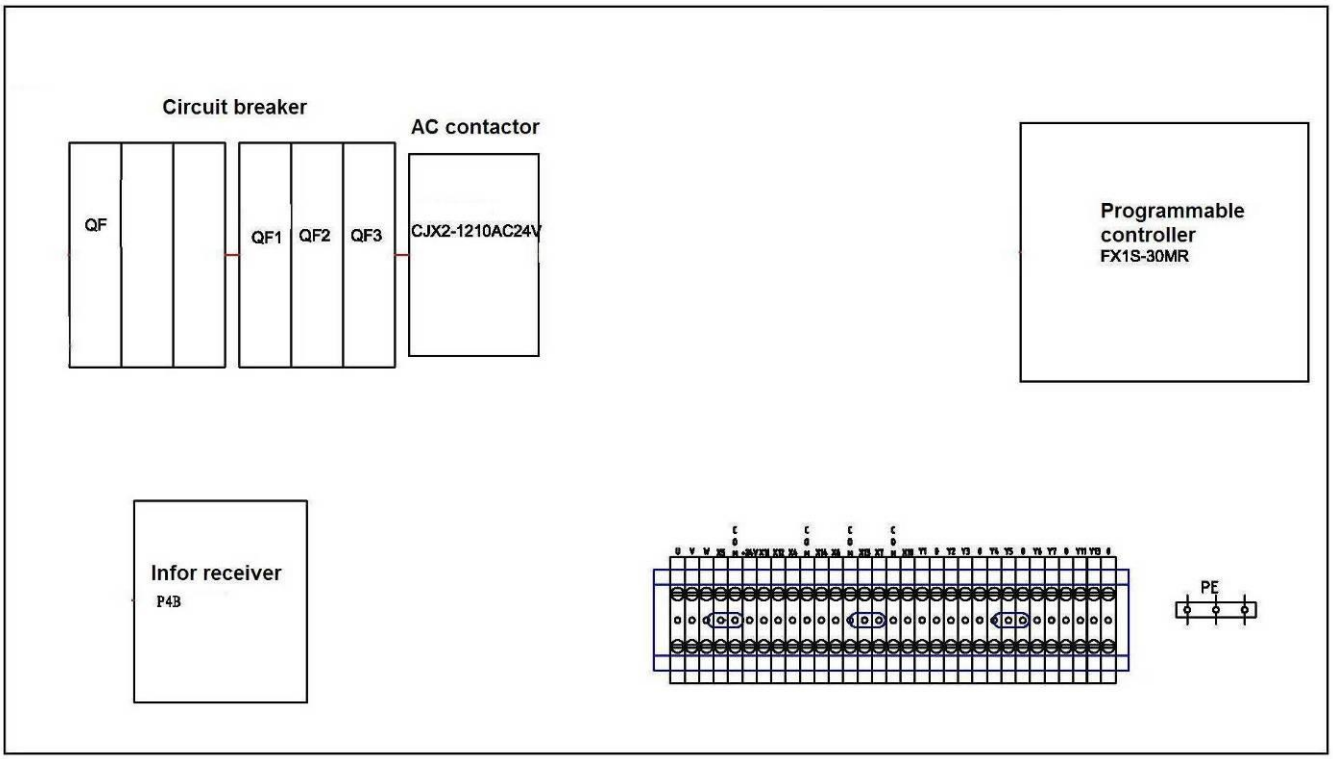


Technical changes for purposes of a technical advancement as well as deviation in colour, errors and printing mistakes are reserved.

**Annex7, Diagram for air supply connection**

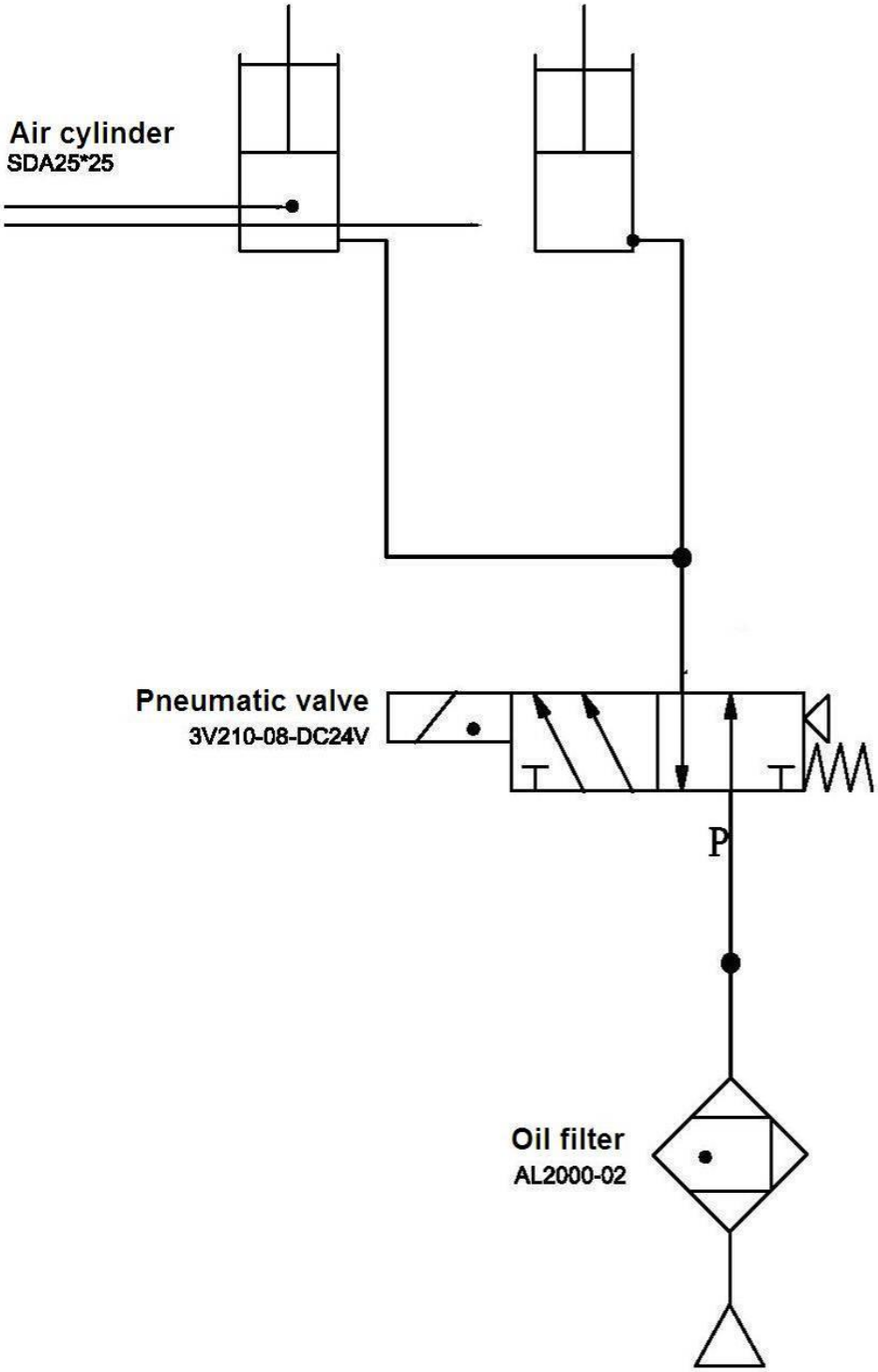


Technical changes for purposes of a technical advancement as well as deviation in colour, errors and printing mistakes are reserved.

## Annex 8, Separate diagrams for the lift

**TW SA-55 (Half)**

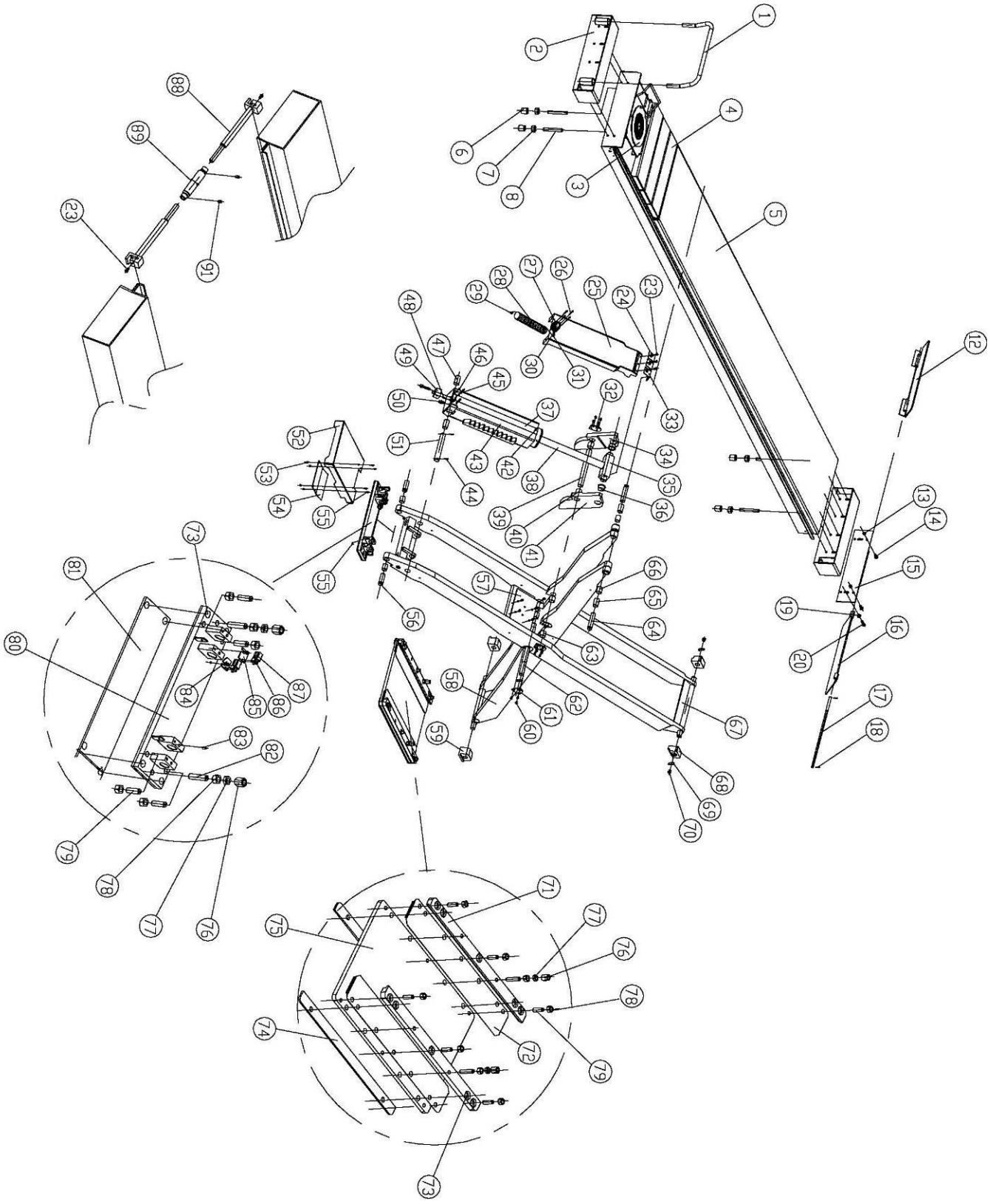

Technical changes for purposes of a technical advancement as well as deviation in colour, errors and printing mistakes are reserved.

| S/N | Material # | Name | Drawing#/Spec. | Qty | Note |
|---|---|---|---|---|---|
| 1 | 426165 | Bending tube of the baffle | 6603-A4-B2 | 2 | |
| 2 | 631003 | Box B | 6605-A1-B3 | 4 | |
| 3 | 261501 | Turn table | 380X380 | 2 | |
| 4 | 631015 | Box | 6605-A24 | 6 | |
| 5 | 631001 | Platform A (welding) | 6605-A1-B1 | 1 | |
| 6 | 272004 | Adjustable nylon slider | 6605-A1-B8 | 8 | |
| 7 | 216009 | Nut | M20 | 8 | |
| 8 | 211087 | Inside hex tightening bolt | M20X140 | 8 | |
| 9 | 262011 | Rotor ball holder | 6435N-A20 | 6 | |
| 10 | 261077 | Pin | 6435N-A22 | 4 | |
| 11 | 631018 | Side slip assembly | 6605-A1-B9 | 2 | |
| 12 | 631005 | Ramp | 6605-A1-B5 | 2 | |
| 13 | 216010 | Self lock nut | M12 | 24 | |
| 14 | 211083 | Inside hex bolt | M12X35 | 4 | |
| 15 | 631004 | Fixing plate of the ramp | 6605-A1-B4 | 2 | |
| 16 | 631006 | Ramp | 6605-A1-B6 | 2 | |
| 17 | 271018 | Ramp shaft | 6605-A1-B7 | 2 | |
| 18 | 224066 | Open pin | 2.5x30 | 4 | |
| 19 | 217005 | Washer | Φ12 | 28 | |
| 20 | 211084 | Inside hex post head bolt | M12X35 | 20 | |
| 21 | 217020 | Washer | Φ8XΦ40X2.5 | 4 | |
| 22 | 211102 | Inside hex round headed bolt | M8X12 | 4 | |
| 23 | 212001 | Outside hex bolt | M8X15 | 14 | |
| 24 | 208006 | Washer | Φ8 | 12 | |
| 25 | 631022 | Teeth of safety lock | 6605-A5 | 2 | |
| 26 | 211017 | Inside hex post bolt | M5X50 | 8 | |
| 27 | 223003 | Air Cylinder | CQ2B 32X30 | 2 | |
| 28 | 226011 | Tensile tube | CL-0850-6 | 1 | |
| 29 | 221047 | PVL air cylinder connector | PV8 | 2 | |
| 30 | 230009 | Noise muffle | SLM-01 | 2 | |
| 31 | 221045 | PLL Swivel two-way air hose connector | PLL8-01 | 2 | |
| 32 | 271031 | Baffle block B | 6605-A14 | 4 | |
| 33 | 271030 | Teeth rod connection plate | 6605-A10 | 6 | |
| 34 | 271032 | Start rotor plate A | 6605-A15 | 2 | |
| 35 | 271052 | Oil cylinder connector | 6605-A3-B3 | | |
| 36 | 220038 | Flange bush | 4025F | 4 | |
| 37 | 271019 | Stainless steel pad | 6605-A3-B4 | 2 | |
| 38 | 271012 | Assistant oil cylinder | 6605-A4-B2 | 1 | Driving oil cylinder for the other half |
| 39 | 271058 | Start rotor plate | 6605-A9 | 2 | |
| 40 | 220037 | Bushing | 3530 | 4 | |
| 41 | 271033 | Start rotor plate B | 6605-A16 | 2 | |
| 42 | 214012 | Cross flat headed bolt | M4X6 | 4 | |
| 43 | 631010 | Sheath of assistant oil cylinder | 6605-A4-B1 | 1 | |
| 44 | 224079 | Open pin | 3x50 | 4 | |
| 45 | 218002 | Washer | Φ6 | 12 | |

Technical changes for purposes of a technical advancement as well as deviation in colour, errors and printing mistakes are reserved.

| S/N | Material # | Name | Drawing#/Spec. | Qty | Note |
|---|---|---|---|---|---|
| 46 | 211094 | Inside hex round headed bolt | M6X12 | 8 | |
| 47 | 220019 | Bushing | 3560 | 4 | |
| 48 | 224080 | Post pin | 6x16 | 2 | |
| 49 | 271020 | 6605 hydraulic block | 6605-A3-B5 | 2 | |
| 50 | 246036 | Hose connector B | 6603-A9-B6 | 2 | |
| 51 | 271059 | Down shaft of oil cylinder | 6605-A11 | 2 | |
| 52 | 431048 | Protection plate A | 6605-A17 | 2 | |
| 53 | 216003 | Nut | M6 | 8 | |
| 54 | 272005 | Rubber pad | 6605-A26 | 2 | |
| 55 | 215004 | Cross round headed bolt | M6X12 | 10 | |
| 56 | 271060 | Shaft of bracket A | 6605-A12 | 4 | |
| 57 | 271025 | Block of padding plate | 6605-A6-B1-C3 | 2 | |
| 58 | 631012 | Bracket B (welding) | 6605-A6-B2-C1 | 2 | |
| 59 | 272001 | Base plate slider | 6605-A6-B2-C2 | 4 | |
| 60 | 214002 | Cross flat headed bolt | M8X12 | 28 | |
| 61 | 271028 | Baffle block A | 6605-A6-B4 | 4 | |
| 62 | 271002 | Mid shaft of bracket | 6605-A6-B3 | 2 | |
| 63 | 220042 | Bushing | 3535 | 4 | |
| 64 | 271061 | Shaft of bracket B | 6605-A13 | 4 | |
| 65 | 220023 | Bushing | 3045 | 4 | |
| 66 | 220016 | Bushing | 3040 | 12 | |
| 67 | 631011 | Bracket A (welding) | 6605-A6-B1-C1 | 2 | |
| 68 | 272002 | Slider of platform | 6605-A6-B1-C2 | 4 | |
| 69 | 219005 | Circlip | Φ30 | 8 | |
| 70 | 250041 | Padding block | 6603-A5-B6 | 4 | |
| 71 | 431045 | Clamp plate of base B | 6605-A8-B2 | 4 | |
| 72 | 431046 | Padding plate for slider | 6605-A8-B3 | 4 | |
| 73 | 222003 | Expansion bolt | M18X160 | 16 | |
| 74 | 431047 | Padding plate of base B | 6605-A8-B4 | 4 | |
| 75 | 431044 | Plate B of Base | 6605-A8-B1 | 2 | |
| 76 | 271029 | Adjustable padding plate | 6605-A7-B3 | 8 | |
| 77 | 216008 | Nut | M16 | 8 | GB/T6174 |
| 78 | 216008 | Nut | M16 | 28 | GB/T6170 |
| 79 | 211093 | Inside hex flat head tightening bolt | M16X50 | 20 | |
| 80 | 631013 | Base A (welding) | 6605-A7-B1 | 2 | |
| 81 | 431041 | Padding plate of base A | 6605-A7-B2 | 2 | |
| 82 | 211086 | Inside hex flat head tightening bolt | M16X70 | 8 | |
| 83 | 211087 | Inside hex sharp head tightening bolt | M8X10 | 8 | |
| 84 | 431043 | Plate D of limit switch | 6605-A7-B5 | 1 | |
| 85 | 431042 | Plate C of limit switch | 6605-A7-B4 | 1 | |
| 86 | 215027 | Cross round headed bolt | M3X15 | 4 | |
| 87 | 321032 | Limit switch | PL-05N | 2 | |
| 88 | 271038 | Connection rod | 6605-A25-B1 | 2 | |
| 89 | 271042 | Mid sheath of connection rod | 6605-A25-B2 | 1 | |
| 90 | 262010 | Rotor ball | 6435N-A21 | 240 | |
| 91 | 227003 | Inside hex sharp head tightening bolt | M6X10 | 2 | |

Technical changes for purposes of a technical advancement as well as deviation in colour, errors and printing mistakes are reserved.

## Annex 9, Spare parts list

### Spare parts list – the mechanical assembly

| S/N | Name | Drawing# | Qty | Material | Note |
|---|---|---|---|---|---|
| 1 | Platform slider | 6605-A6-B1-C2 | 4 | Reinforced POM | |
| 2 | Base slider | 6605-A6-B2-C2 | 4 | Reinforced POM | |
| 3 | Limit switch | PL-05N | 2 | Standard | |
| 4 | Air cylinder | CQ2B32X30 | 2 | Standard | |
| 5 | Rotor ball | 6435N-A21 | 240 | POM | |

### Spare parts list – the electrical system

| S/N | Material # | Name | Spec. | Unit | Qty | Note |
|---|---|---|---|---|---|---|
| 1 | 321001 | Power switch | LW26GS-20/04 | Pcs | 1 | |
| 2 | 321008 | Button | Y090-11BN | Pcs | 3 | |
| 3 | 324021 | Power indicator | AD17-22G-AC24 | Pcs | 1 | |
| 4 | 320124 | Transformer | JBK-160VA220V-220V100VA 24V60VA | Pcs | 1 | Same outlook as item 7 |
| 5 | 320125 | Transformer | JBK-160VA230V-220V100VA 24V60VA | Pcs | 1 | Same outlook as item 7 |
| 6 | 320126 | Transformer | JBK-160VA240V-220V100VA 24V60VA | Pcs | 1 | Same outlook as item 7 |
| 7 | 320092 | Transformer | JBK-160VA380V-220V100VA 24V60VA | Pcs | 1 | |
| 8 | 320097 | Transformer | JBK-160VA400V-220V100VA 24V60VA | Pcs | 1 | Same outlook as item 7 |
| 9 | 320129 | Transformer | JBK-160VA415V-220V100VA 24V60VA | Pcs | 1 | Same outlook as item 7 |
| 10 | 330004 | AC contactor | CJX2-1210/AC24 | Pcs | 1 | |
| 11 | 327004 | Circuit breaker | DZ47-63 C16 /3P | Pcs | 1 | |

Technical changes for purposes of a technical advancement as well as deviation in colour, errors and printing mistakes are reserved.

| S/N | Material # | Name | Spec. | Unit | Qty | Note |
|---|---|---|---|---|---|---|
| 12 | 327003 | Circuit breaker | DZ47-63 C32 /2P | Pcs | 1 | |
| 13 | 327003 | Circuit breaker | DZ47-63 C3 /1P | Pcs | 1 | |
| 14 | 313016 | Pneumatic valve | 3V210-08/DC24 | Pcs | 1 | |
| 15 | 321004 | Limit switch | D4MC5020 | Pcs | 2 | |
| 16 | 321007 | Option switch | Y90-11x/21 | Pcs | 1 | |
| 17 | 321022 | Bridge rectifier | KBPC5A-35A | Pcs | 1 | |
| 18 | 335007 | Capacitor | 4700UF/50V | Pcs | 1 | |
| 19 | 328003 | Control box | Big | Pcs | 1 | |
| 20 | 321014 | Remote control panel (remote control button ) | P4B/ BMF500 | Pcs | | |
| 21 | 334021 | Programmable controller | FX1S-30MR | Pcs | 1 | |
| 22 | 321005 | Limit switch | PL-05N | Pcs | 1 | |

Technical changes for purposes of a technical advancement as well as deviation in colour, errors and printing mistakes are reserved.

| S/N | Material # | Name | Spec. | Unit | Qty | Note |
|---|---|---|---|---|---|---|
| 23 | 321035 | Proximity switch | ST16-536NA（NPN）<br>Outside swivel | Pcs | 1 | |

## Annex 10, Size and weight requirements on vehicles

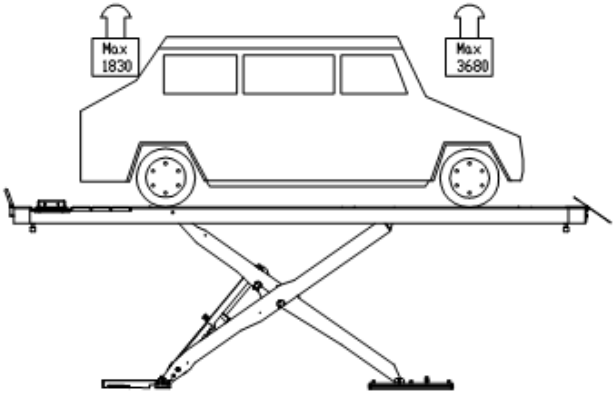


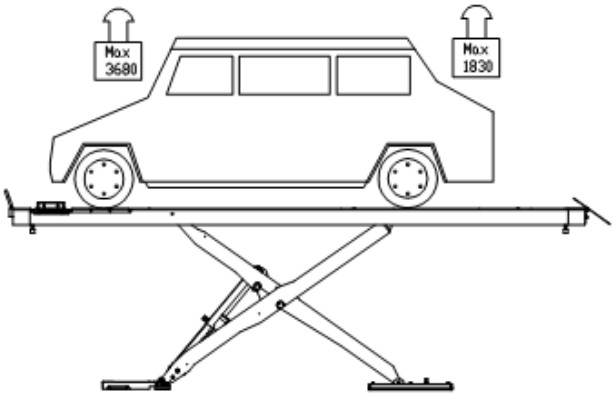


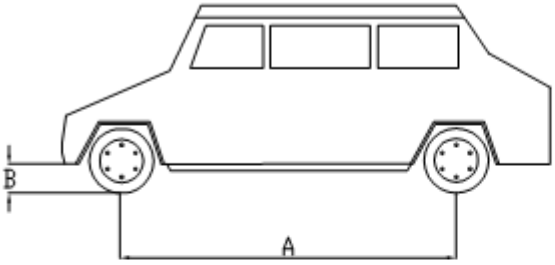


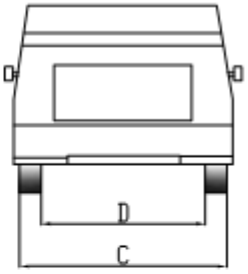


| | Min(mm) | Max(mm) |
|---|---|---|
| A | - | 4000 |
| B | 100 | - |
| C | - | 2000 |
| D | 1000 | - |

Technical changes for purposes of a technical advancement as well as deviation in colour, errors and printing mistakes are reserved.

**Space for notes:**

Technical changes for purposes of a technical advancement as well as deviation in colour, errors and printing mistakes are reserved.

# Preperation protocol

The lift type ..... with the

serial number: ..... was built on .....

by the company ..... in .....

and was checked for safety and function and was put into operation.

The set up and preparation was carried out by the OPERATOR | EXPORT

The safety of the lift was checked by an .

The operator confirms the installation of the lift, and qualified experts have comfirmed proper install before launching unit.

---

Date Owner/ Operator Signature

---

Date Installation expert Signature

Address Owner/ Operator:

---

Address Installation expert:

---

## Safety review pursuant to UVV type

Safety inspection before commissioning/ regular checks/ extraordinary
(Mark off those that do not apply)

| Inspection | Good shape | defective | Re-inspection | Notes |
|---|---|---|---|---|
| Warning labels/ signs | | | | |
| Name plate/ ID | | | | |
| Limit switch function | | | | |
| Condition of rubber plates | | | | |
| Function of carrier arm locks | | | | |
| Supporting structure (cracks etc.) | | | | |
| Function of safety latches | | | | |
| All screws tight | | | | |
| Condition of steel cables | | | | |
| Condition of covers | | | | |
| Condition of chain | | | | |
| Condition of cable pulleys | | | | |
| Condition of hydraulic lines | | | | |
| Fluid level of hydraulic unit | | | | |
| Hydraulic system seals | | | | |
| Condition of the piston rod | | | | |
| Condition of electronics | | | | |
| Function test of the lift | | | | |
| Foundation condition (cracks) | | | | |
| Lift Slides/guides in the lift column | | | | |
| Other | | | | |
| (Check the appropriate box, if re-inspection is necessary mark that box as well!) | | | | |

Inspector (Name, Address): ……

Inspected on: ……

**Inspection result:**

| | |
|---|---|
| | Commissioning/ use possible. Resolve issues by …… |
| | Commissioning/ use prohibited. Re-inspection neccesary. |
| | No defects. Commissioning/ use possible. |

Signature owner/ operator: ……

Signature inspector: ……

## Inspection findings

Regular/ extraordinary inspection

On the date of …… this lift was put through a regular/ extraordinary and thorough inspection. During this inspection these issues were/ were not found.

Scope of the audit:

Outstanding partial inspection:

The use of this equipment is authorized and the machine and all features have been inspected .

Location/ Date Inspectors signature

## Operator or agent

Taken notes of the defects …… ……

Defect corrected …… ……

Date Signature

## Verification

Date Signature

On the date of …… this lift was put through re-inspection. During this inspection these issues were/ were not found.

The use of this equipment is authorized and the machine and all features have been inspected.

Location/ Date Inspectors signature

## Safety review pursuant to UVV type

Safety inspection before commissioning/ regular checks/ extraordinary
(Mark off those that do not apply)

| Inspection | Good shape | defective | Re-inspection | Notes |
|---|---|---|---|---|
| Warning labels/ signs | | | | |
| Name plate/ ID | | | | |
| Limit switch function | | | | |
| Condition of rubber plates | | | | |
| Function of carrier arm locks | | | | |
| Supporting structure (cracks etc.) | | | | |
| Function of safety latches | | | | |
| All screws tight | | | | |
| Condition of steel cables | | | | |
| Condition of covers | | | | |
| Condition of chain | | | | |
| Condition of cable pulleys | | | | |
| Condition of hydraulic lines | | | | |
| Fluid level of hydraulic unit | | | | |
| Hydraulic system seals | | | | |
| Condition of the piston rod | | | | |
| Condition of electronics | | | | |
| Function test of the lift | | | | |
| Foundation condition (cracks) | | | | |
| Lift Slides/guides in the lift column | | | | |
| Other | | | | |
| (Check the appropriate box, if re-inspection is necessary mark that box as well!) | | | | |

Inspector (Name, Address): ……

Inspected on: ……

**Inspection result:**

☐ Commissioning/ use possible. Resolve issues by ……
☐ Commissioning/ use prohibited. Re-inspection neccesary.
☐ No defects. Commissioning/ use possible.

Signature owner/ operator: ……

Signature inspector: ……

## Inspection findings

Regular/ extraordinary inspection

On the date of …… this lift was put through a regular/ extraordinary and thorough inspection. During this inspection these issues were/ were not found.

Scope of the audit:

Outstanding partial inspection:

The use of this equipment is authorized and the machine and all features have been inspected .

Location/ Date Inspectors signature

## Operator or agent

Taken notes of the defects …… ……

Defect corrected …… ……

Date Signature

## Verification

Date Signature

On the date of …… this lift was put through re-inspection. During this inspection these issues were/ were not found.

The use of this equipment is authorized and the machine and all features have been inspected.

Location/ Date Inspectors signature

EG-declaration of conformity

CE

TWIN BUSCH GERMANY

The company

**Twin Busch GmbH | Amperestr. 1 | D-64625 Bensheim**

declares hereby, that the **scissor vehicle lift**

**TW SA-55** (6605) | **5500 kg**

serial no.

in the configuration placed on the market by us, meets the relevant safety and health requirements, as required by the following EC directive(s) in it's/their current version(s).

EG-directive(s)

**2006/42/EC machines**

Applied harmonized standards and regulations

**EN 1493:2010, Annex 1 2006/42/EC**

CE Certificate

**MDC 1623**

| | |
|---|---|
| date of issue: | 31.08.2016 |
| place of issue: | Durham |
| technical file no.: | CST228666/1/TF |

Certification body

SGS United Kingdom Limited,
Unit 12a & 12b, Bowburn South Industrial Estate
Bowburn, Durham DH6 5AD
Notified Body Appointment No. 0353

**Any alteration to the equipment, improper use or installation void this declaration.**

Authorized person to compile technical documentation is: Michael Glade (adress as below)

TWIN BUSCH GERMANY
TWIN BUSCH GmbH
Amperestr. 1 · 64625 Bensheim
Tel. 06251 / 70585-0 · Fax: 70585-29

Authorized signatory: Michael Glade
Bensheim, 01.12.16 Qualitätsmanagement

Twin Busch GmbH | Amperestraße 1 | D-64625 Bensheim
Tel.: +49 (0) 6251-70585-0 | Fax: +49 (0) 6251-70585-29 | info@twinbusch.de